Press-Connect Fittings for Natural Gas

Jason Allison- Technical Manager New England Viega LLC
Jason.Allison@viega.us
508-564-3943
Andrew Cabral- Manager Meter Services Eversource Energy
Andrew.cabral@eversource.com
508-272-6816

Press History

Press Innovation

1959	1969	1989	2000	2012
First press patent for steel	Mannesmann starts mfg.	Bronze press	Un-Pressed Fitting Identification	Carbon Steel

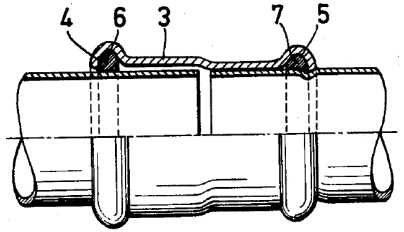

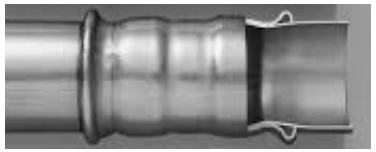

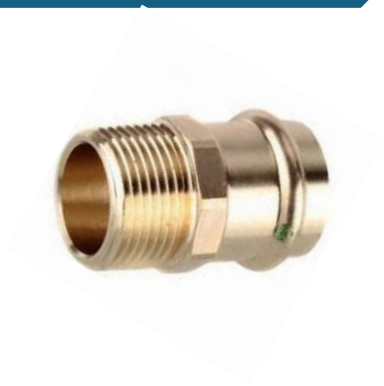

Features & Benefits

- Carbon steel fitting with Zinc/Nickel coating
  - Corrosion Resistance
- EPDM, HNBR, & FKM sealing elements
  - Hydronics, fire protection, gas, vacuum, air, etc.
- Un-Pressed Fitting Identification Feature
  - Ensures all connections are pressed prior to commissioning!
- Many fitting configurations
  - Couplings, elbows, tees, reducers, adapters, etc.
- Most major tool manufacturers make press tools.
  - Ridgid, Milwaukee, Hilti, Dewalt.

Features & Benefits

- For use with black or galvanized steel pipe
- Retains structural integrity of pipe
- No threading equipment or accessories
- Piping systems install using the same means and methods; *only the connection method changes!*

- No welding or fire watch
- Installation under flow conditions Water Only
- Clean - No oils or debris

- Reduced installation time
  - More jobs done in less time
  - 30% - 60% time savings over threading
  - Up to 90% time savings over welding

- Reliable
- Consistent connection every time
- Proven press technology

Fitting Identification

EPDM

- Green Dot
- Shiny black sealing element
- Packaged in a ***CLEAR BAG*** with white label

HNBR

- Yellow Dot
- Yellow sealing element
- Packaged in a ***YELLOW BAG*** with white label

FKM

- White Dot
- Dull Black sealing element
- Packaged in an ***ORANGE BAG*** with white label

Fitting Identification

Fitting Markings

- ***Yellow Dot:*** **HNBR** Sealing Element with Smart Connect technology
- Fitting sizes ½” – 4”
- CSA stamp: Indicates certification to ANSI/CSA LC4,
- 125G: CSA maximum pressure rating for fuel gas or fuel oil applications
- Manufacturer Name
- Manufacture Date Code
- UPC
- STD S58

Fitting Performance

Pressure and Temperature

- ½” – 4”
- HNBR Sealing Element
  - - 40°F to 180°F

- Max operating Pressure
  - 125 psi for fuel gas applications
  - 200 psi for other approved applications.

- Test up to 200 psi with air

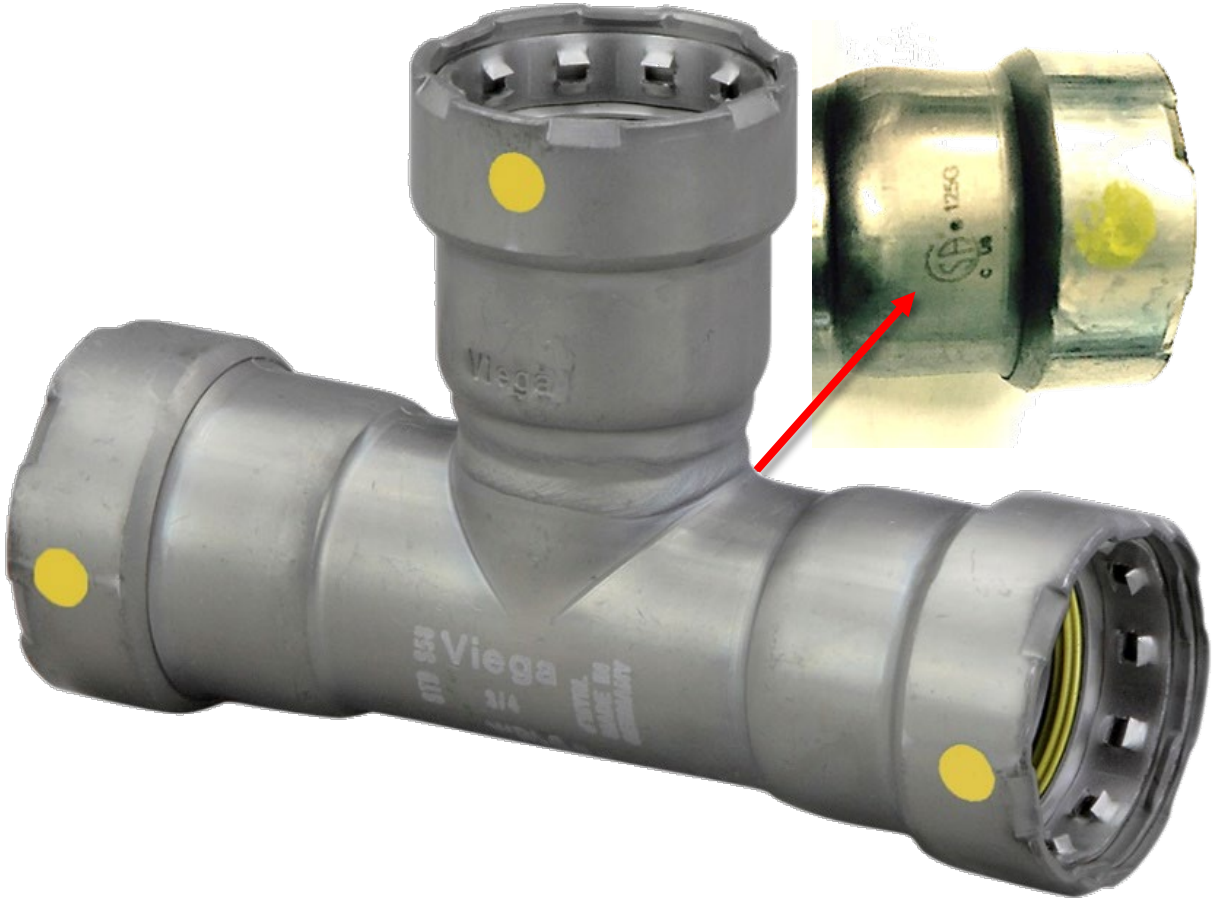

Static Seal vs. Dynamic Seal

Static Seal

- Static seals are usually used when there is no relative motion between mating surfaces. (permanent connections – sealing on the surface)

Dynamic Seal

- Dynamic seals are the opposite. They are used when there is motion between surfaces. This can be either reciprocating, rotating, or oscillating motions.

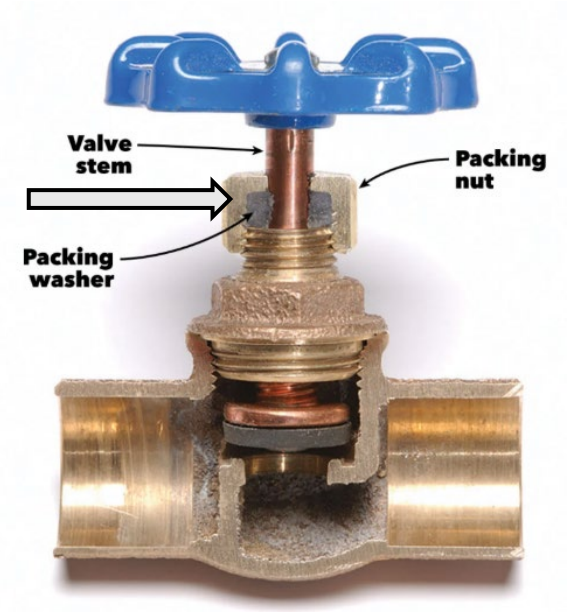

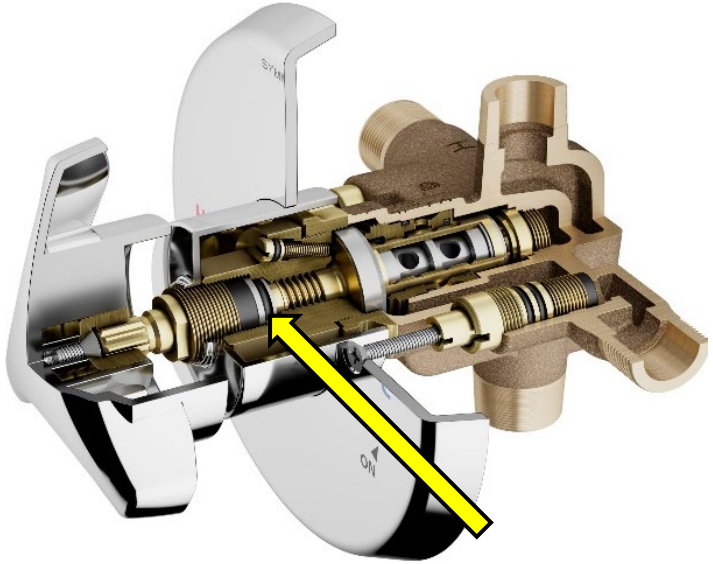

½” to 2” – Technical Information

Fitting Components

- 420 stainless steel grip ring
  - Bi-directional teeth grip the pipe and ensure that the fitting is locked securely to the piping.

- 304 stainless steel separator ring
  - Protects sealing element by providing positive physical separation

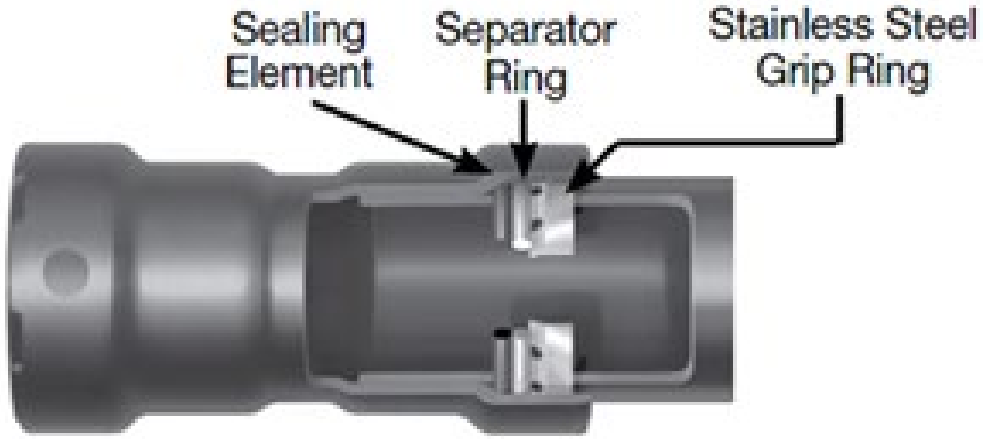

2 ½” to 4”– Technical Information

Fitting Components

- 420 stainless steel grip ring
  - Provides mechanical strength
- Black Graphite separator ring
  - Protects sealing element from grip ring
- HNBR sealing element
  - Broad selection of applications, temperatures, and pressures

Sealing Elements are never interchangeable

Technical Information

Pipe Compatibility: *½” – 4” sizes*

Yellow dot, HNBR sealing element

- Schedule **5 - 40**
- **Schedule 40** only in fuel gas applications
  - 2018 NFPA 54 allows Sch.10 in fuel gas, only with Press Connect Fittings.

Technical Information

Pipe Compatibility

ASTM A53

- Specification for Pipe, Steel, Black and Hot-Dipped, Zinc-Coated Welded and Seamless

ASTM A135

- Specification for Electric Resistance Welded Steel Pipe

ASTM A795

- Specification for Black and hot-dipped, Zinc-coated (Galvanized), Welded and Seamless Steel Pipe for Fire Protection Use

ASTM A106

- Standard Specification for Seamless Carbon Steel Pipe for High-Temperature Service

ASME B36.10

- Standard covers the standardization of dimension of welded and seamless wrought steel pipe for high or low temperatures and pressures.

Approved Locations

Underground Installations

- Fitting systems are approved for underground installations. However, any installations must meet all state and local codes, including those for underground

Concealed Spaces

- Fittings have been examined against the construction and performance criteria in the CSA requirement LC-4 and were found acceptable.

- Specific performance tests were conducted to evaluate the fittings for use in concealed locations

Connection

Force Generation

Hydraulic Ram:	7,200 lbs (32KN)
Weight:	8.3 lbs
Approx. Cycle Time:	4 seconds
Service Interval:	42,000 cycles

Force Transmission

Material Deformation

Fitting is pressed before, after, and on top of the sealing element in a single step, creating a metal-to-metal seizure.

Maintaining a Static Seal

Press Force Required

Carbon Steel Press

- ½” – ¾” 24 KN (5400 lbs.)
- 1” – 2” 32 KN (7200 lbs.)

Installation

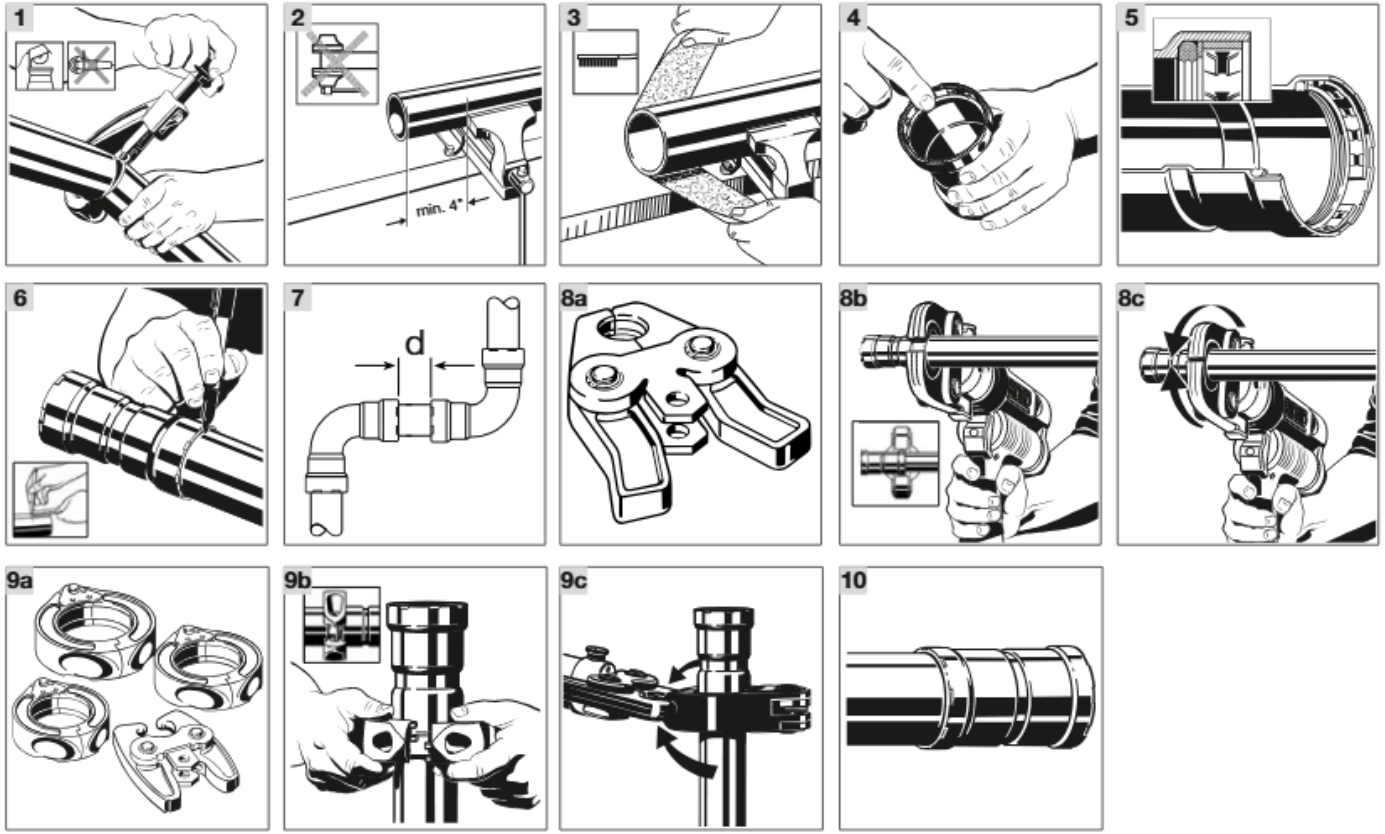

1. Cut piping at right angles using displacement-type cutter.
2. Keep end of piping a minimum of 4" away from the contact area of the vise to prevent possible damage to the piping.
3. Deburr inside and outside of the pipe and prep to proper insertion depth using a preparation tool or fine-grit sandpaper.
4. Check seal, separator ring, and grip ring for correct fit. Do not use oils or lubricants.
5. Illustration demonstrates proper fit of grip ring, separator ring, and sealing element.
6. Mark proper insertion depth. Improper insertion depth may result in an improper seal. It is recommended that the depth marking be visible on the completed assembly.

Minimum Insertion Depth for MegaPress

Pipe Size	½"	¾"	1"	1¼"	1½"	2"
Insertion Depth	1 1/16"	1 3/16"	1 3/8"	1 13/16"	1 7/8"	2"

Installation

Pipe Preparation

- Pipe surfaces must be smooth, free of indentations, pits and deformations and must be clean and free of debris, rust, scale, paint, oil, grease.
- It is not necessary to completely remove protective coatings or expose the bare steel material.
- To avoid leak paths, engraved or stamped pipe shall not be used with the fitting system.
- Pipe ends are to be cut square and de-burred internally and externally. The pipe end shall be prepped to the proper insertion depth.

Installation

Description	Different kinds of pipe surface	Prep necessary	Surface after prepping	Comments
		Yes / No		
pipe without lacquer		No		If the pipe has no lacquer and there is no rust on the surface and the surface is smooth no preparing is necessary
pipe with lacquer		Yes		If the pipe is coated with lacquer the lacquer has to be smoothed. It is not necessary to completely remove the lacquer.
pipe with black shellac	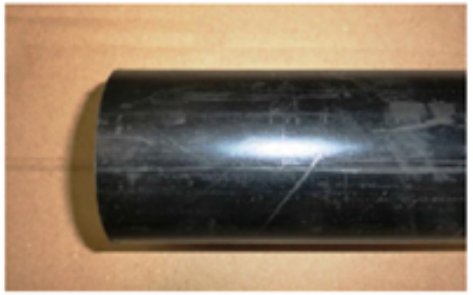	Yes		If the pipe is coated with black lacquer the lacquer has to be smoothed. It is not necessary to completely remove the lacquer.

Installation

Description	Different kinds of pipe surface	Prep necessary	Surface after prepping	Comments
		Yes / No		
pipe with rust		Yes		If the pipe has no lacquer and there is a rust film on the surface the surface has to be prepped until the rust film is removed and the pipe surface is smooth.
Epoxy coated pipe: If the pipe has a smooth, permanent coating no prep is required, other than light smoothing if scratches are present,.		No		If the pipe has cataphoretic coating and the surface is smooth no prep is required. It may be necessary to reduce the coating diameter to fit the pipe to the fitting.
Galvanized pipe is typically smoother on it's surface but a light burnishing with scotch-brite will reveal any irregularities and smooth the surface for pressing.		Yes		In all cases of pipe prep it is always a best practice to ensure your pipe end is prepped up to minimum insertion depth. Marking this on the pipe will ensure you have the adequate area prepped.

Installation

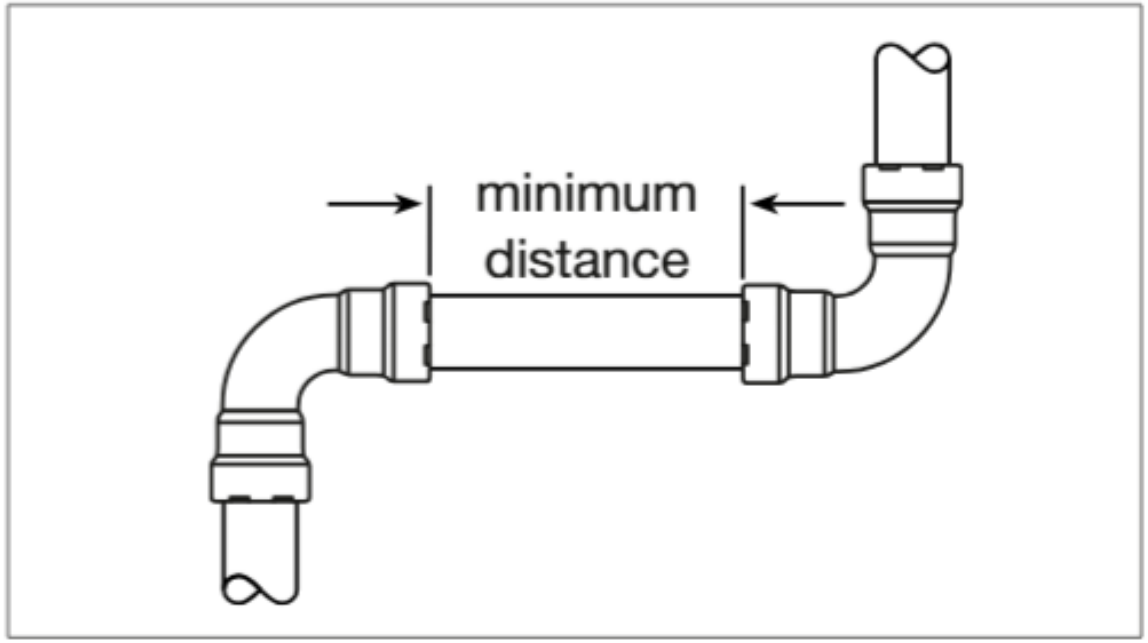

Viega MegaPress Minimum Distance		
Pipe Diameter (in)	Minimum Distance (in)	Minimum Distance (mm)
½	¼	7
¾	¼	7
1	¼	7
1¼	½	13
1½	½	13
2	½	13
2½	½	13
3	½	13
4	½	13

Installation

Welding Near Fittings

- **Welding Adjacent to Fittings** - the installer must remain 4" away from the connection to prevent damage to the sealing element.
- **Welding In Line with Fittings** - the installer must remain a minimum of 3 feet away from the connection to prevent damage to the sealing element.
- **The installer can take the following precautions:**
  - Wrapping the connection with a cold wet rag
  - Protecting the connection with a weld blanket
  - Fabricating weld connections prior to installing the pressed fitting, making sure the pipe has cooled before installing the fitting
  - Consistently applying heat sink gel or spray

Installation

Bonding, Expansion & Transitions

Electrical Bonding

- When properly installed, fittings are in compliance with:
  - Section 1211.15, Electrical Bonding and Grounding, of the Uniform Plumbing Code
  - Section 310 of the International Fuel Gas Code

- The mechanical press provides continuous metal to metal contact between fitting and pipe.
  - The press ensures the continuity of the bonding through this contact.

Transition Connections

- Systems 1/2" – 4" can be joined with off-the-shelf threaded fittings. In this regard:
  - The threaded connection is made first
  - The press fitting is made second

Identify *Un-Pressed* Connections

Smart Connect Technology

- Smart Connect is designed so that ***un-pressed*** connections will not hold pressure between **½ - 45psi air and 15 – 85psi water.**
- After assuring system is fully pressed, you may continue with your specified test, up to 600psi with water or 200psi with air.
- All system testing shall be carried out in accordance with the local authority having jurisdiction.

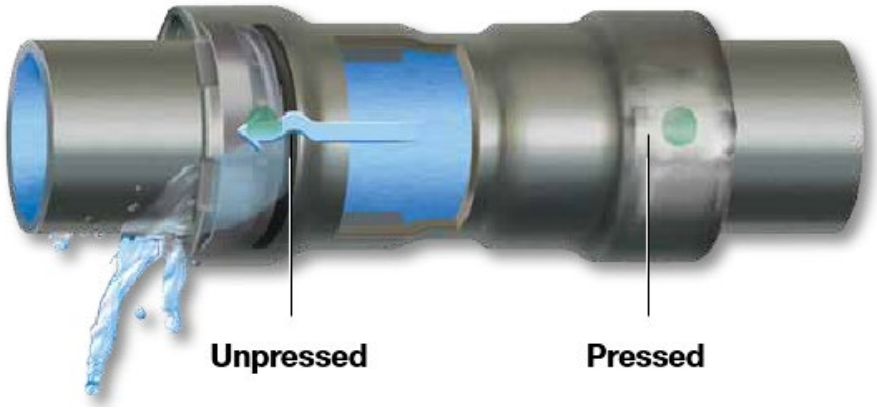

Listings ICC

ICC EVALUATION SERVICE

ICC-ES PMG Product Certificate **PMG-1036**

Effective Date: July 2023

This listing is subject to re-examination in one year.

www.icc-es-pmg.org | (800) 423-6587 | (562) 699-0543 *A Subsidiary of the International Code Council®*

CSI: DIVISION: 23 00 00—HEATING, VENTILATING, AND AIR-CONDITIONING (HVAC)
Section: 23 11 00—Facility Fuel Piping

Product certification system:

The ICC-ES product certification system includes testing samples taken from the market or supplier's stock, or a combination of both, to verify compliance with applicable codes and standards. The system also involves factory inspections, and assessment and surveillance of the supplier's quality system.

Products: Viega LLC MegaPressG System: Press-connect metallic fittings and valve for fuel gas distribution systems

Listee: Viega LLC
585 Interlocken Blvd
Broomfield CO 80021
www.viega.us

Compliance with the following codes:

2021, 2018, 2015, 2012, 2009, and 2006 *International Fuel Gas Code®* (IFGC)
2024, 2021, 2018, 2015, 2012, 2009, and 2006 *International Residential Code®* (IRC)
2024, 2021, 2018, 2015, 2012, 2009, and 2006 *Uniform Plumbing Code®* (UPC)*
2024, 2021, 2018, 2015, 2012, 2009, and 2006 Uniform Mechanical Code® (UMC)*
2022, 2019 and 2016 *California Plumbing Code* (CPC)
2023, 2020 and 2017 *City of Los Angeles Plumbing Code*
ASME B31 Code for Pressure Pipe; standards B31.1-2022, B31.3-2022 and B31.9-2020

**Copyrighted publication of the International Association of Plumbing and Mechanical Officials*

Compliance with the following standards:

ASTM A 53-2022, Standard Specification for Pipe, Steel, Black and Hot Dipped Zinc-coated Welded and Seamless
ASTM A 106-2019a, Standard Specification for Seamless Carbon Steel Pipe for High-Temperature Service
ANSI LC 4a-2022/CSA 6.32a-2022, Press-connect Metallic Fittings for Use in Fuel Gas Distribution Systems
NFPA 54-2021, National Fuel Gas Code
NFPA 58-2020, Liquefied Petroleum Gas Code
CSA B149.1-2020, Natural Gas and Propane Code
ASTM F3226-2019, Standard Specification for Metallic Press-Connect Fittings for Piping and Tubing Systems
ANSI/CAN/UL/ULC 180, Standard for Combustible Liquid Tank Accessories, 9th Edition

Compliance with the following standards:

ASTM A 53-2022, Standard Specification for Pipe, Steel, Black and Hot Dipped Zinc-coated Welded and Seamless
ASTM A 106-2019a, Standard Specification for Seamless Carbon Steel Pipe for High-Temperature Service
ANSI LC 4a-2022/CSA 6.32a-2022, Press-connect Metallic Fittings for Use in Fuel Gas Distribution Systems
NFPA 54-2021, National Fuel Gas Code
NFPA 58-2020, Liquefied Petroleum Gas Code
CSA B149.1-2020, Natural Gas and Propane Code
ASTM F3226-2019, Standard Specification for Metallic Press-Connect Fittings for Piping and Tubing Systems
ANSI/CAN/UL/ULC 180, Standard for Combustible Liquid Tank Accessories, 9th Edition

Listings are not to be construed as representing aesthetics or any other attributes not specifically addressed, nor are they to be construed as an endorsement of the subject of the listing or a recommendation for its use. There is no warranty by ICC Evaluation Service, LLC, express or implied, as to any finding or other matter in this listing, or as to any product covered by the listing.

Copyright © 2023 ICC Evaluation Service, LLC. All rights reserved.

Page 1 of 4

49CFR192, Subparts B – Materials; F - Joining of Materials other than by welding; I - Requirements for Corrosion Control; and Subpart J - Test Requirements

Compliance with the following codes:

2021, 2018, 2015, 2012, 2009, and 2006 *International Fuel Gas Code®* (IFGC)
2024, 2021, 2018, 2015, 2012, 2009, and 2006 *International Residential Code®* (IRC)
2024, 2021, 2018, 2015, 2012, 2009, and 2006 *Uniform Plumbing Code®* (UPC)*
2024, 2021, 2018, 2015, 2012, 2009, and 2006 Uniform Mechanical Code® (UMC)*
2022, 2019 and 2016 *California Plumbing Code* (CPC)
2023, 2020 and 2017 *City of Los Angeles Plumbing Code*
ASME B31 Code for Pressure Pipe; standards B31.1-2022, B31.3-2022 and B31.9-2020

**Copyrighted publication of the International Association of Plumbing and Mechanical Officials*

Testing

ASTM F3226

- **Hydrostatic Proof test**
  - 100 psi (5 min) -> 1.5x rating (5 min)
- **Hydrostatic Burst test**
  - 4x rating (1 min)
- **Pull-out test**
  - Axial load according to L= $\frac{\pi}{4}D^2p$
  - Load under 1x rating (5 min)
- **Vacuum test**
  - 5.4 inHg (5 min)
- **Fire test**
  - Min 73 psi flowing at 80° C (30 min)
  - Flame at 800 ° C, Repeat proof test
- **Impulse Pressure test**
  - 500,000 cycles of 0 – 1.5x rating at 30-100 cycles/min

	Minimum Axial Strength (lb)
Ø (in)	MegaPress
1/2	61
3/4	120
1	199
1 1/4	297
1 1/2	415
2	709
3	1534
4	2673

Testing

ASTM F3226

- **1.5x rated pressure**
- **3 million cycles**
  - **Eg: Deflected 0.5mm, 45 times per second, for 18.5 hours**

Amplitude (mm)	Frequency (Hz)	Time (hr)
±0.06	100	8.3
±0.5	45	18.5
±1.5	10	83

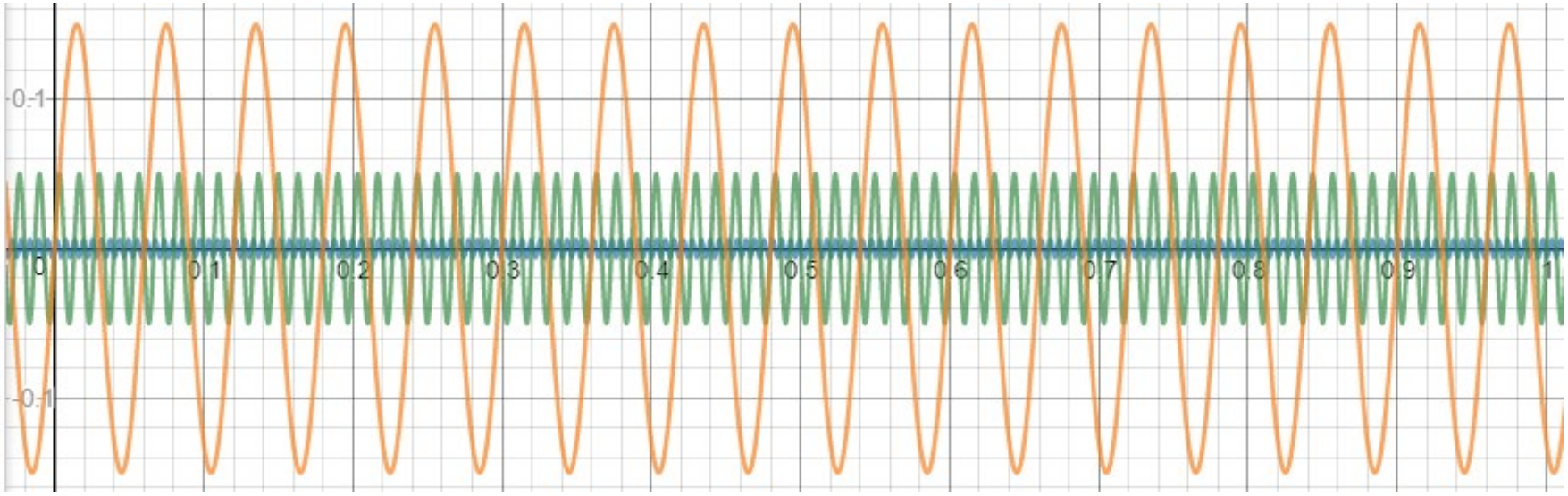

ANSI/CSA LC4 Natural Gas

CSA GROUP™

Certificate of Compliance

Certificate: 2492156 **Master Contract:** 205817

Project: 80052814 **Date Issued:** 2020-09-01

Issued To: **Viega LLC**
585 Interlocken Blvd.
Broomfield, Colorado, 80021
United States

Attention: Frank Shingleton

The products listed below are eligible to bear the CSA Mark shown with adjacent indicators 'C' and 'US' for Canada and US or with adjacent indicator 'US' for US only or without either indicator for Canada only.

Issued by: James Sekerak
James Sekerak

C US

PRODUCTS
CLASS - C330591 - GAS ACCESSORY DEVICES - Press Connect Type Metallic Fittings Certified to US Standards
CLASS - C330511 - GAS ACCESSORY DEVICES Press Connect Type Metallic Fittings

MegaPressG* Model	Description	Size Range
6611	Adapter MNPT	1/2", 3/4", 1", 1-1/4", 1-1/2", 2"
6611XL	Adapter MNPT	2-1/2", 3", 4"
6612	Adapter FNPT	1/2", 3/4", 1", 1-1/4", 1-1/2", 2"

HISTORICAL

ANSI LC 4-2012/CSA 6.32-2012 (R2016)

ANSI LC 4-2012/CSA 6.32-2012 (R2016) - Press-Connect Metallic Fittings For Use In Fuel Gas Distribution Systems

Preface

This publication represents a basic standard for safe operation, substantial and durable construction, and acceptable performance of press-connect metallic fittings for use in fuel gas distribution systems. It is the result of years of experience in the manufacturer, testing, installation, maintenance, inspection of research on press-connect metallic fittings. There are risks of injury to persons inherent within appliances and accessories that, if completely eliminated, would defeat the utility of the appliance or accessory. The provisions in this standard are intended to help reduce such risks while retaining the normal operation of the appliance or accessory.

Scope

1.1
This standard applies to metallic (copper, steel and stainless steel) press-connect type fittings, and valves (hereafter referred to as fittings unless otherwise specified) for use with fuel gas systems intended for installation above ground, below ground, indoors and outdoors.

1.2
This standard applies to fuel gas systems rated for operating pressures not exceeding 125 psi (862 kPa).

ANSI/CSA LC4 Natural Gas

5.4 Axial strength

5.4.1 General

Tube/pipe, fittings, and joints shall withstand, without leakage in excess of that specified in Clause 5.2.1 and without becoming detached, a tensile load of 800 lb/in (140.2 kN/m) of outside tube/pipe diameter.

5.4.2 Method of test

A test assembly consisting of lengths of tube/pipe and one of each type of fitting shall be assembled in accordance with the manufacturer's installation instructions.

One end of the assembly shall be securely attached to a fixed pipe to which a pneumatic system capable of supplying clean, dry air or nitrogen and a flow measuring device capable of accurately indicating the allowable leakage rate is connected. The other end shall be securely attached in a similar manner to a closed pipe connected to a mechanical means capable of applying a constant pulling force of 800 lb (140.2 kN/m) per inch of nominal outside tube/pipe diameter.

The required tensile load shall be applied to the test assembly and maintained for the duration of the test. At the end of 5 min, the assembly shall not leak in excess of 0.704 fl oz/h (20 cm^3/h) when tested in accordance with Clause 5.2.2.1.

ANSI/CSA LC4 Natural Gas

5.7 Impact strength

5.7.1 General

Test assemblies shall withstand an impact of 30 ft/lb (40.67 J) as specified in the following method of test.

5.7.2 Method of test

A test assembly consisting of each type of fitting and sections of tube/pipe shall be assembled in accordance with the manufacturer's installation instructions. A V-block steel holder shall be used to support the assembly for impacting. The sides of the "V" shall be of sufficient length to support the tube/pipe below the top edges of the "V." The V-block and the fittings to be impacted shall be supported on a hard flat surface.

An impact of 30 ft/lb (40.67 J) shall be applied to the assembly using a 10 lb weight (4.5 kg) falling 3 ft (914 mm) through a vertical guide tube. The striking nose of the falling weight shall have a 1/2 in (12.7 mm) spherical radius and shall be made of steel. The arrangement shall be such that the striking nose of the falling weight will impact at the center of the fitting-tube/pipe joint.

Each test assembly shall then be subjected to Clause 5.3 and shall comply.

ANSI/CSA LC4 Natural Gas

5.6 Bending strength

5.6.1 General

Test assemblies shall withstand, without leakage in excess of that specified in Clause 5.2.1 and without damage, a bending load applied as specified in Table 2.

5.6.2 Method of test

A fitting shall be assembled in accordance to the manufacturer's installation instructions to two 40 in (1016 m) long pieces of tube/pipe. The assembly shall be placed on supports spaced 6 ft (1.83 m) apart. The load shall be applied to the centre of the span at the center of the fitting. The load shall be applied in accordance with Table 2 and maintained for 15 min. At the end of 15 min, the assembly shall not leak in excess of 0.704 fl oz/h (20 cm³/h) when tested in accordance with Clause 5.2.2.1.

Figure 1
Typical arrangement
(See Clause 5.8.2.)

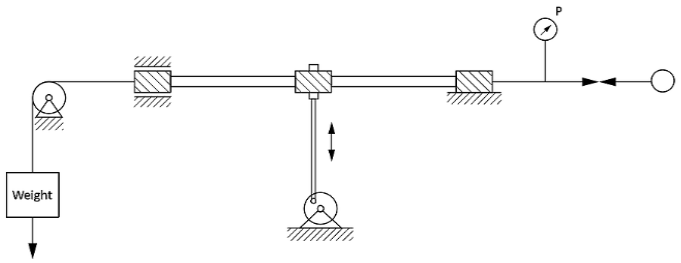

Table 2
Bending load
(See Clauses 5.6.1 and 5.6.2.)

Nominal size, in	Load, lb (kg)
1/2	25 (11)
3/4	40 (18)
1	53 (24)
1-1/4	68 (31)
1-1/2	84 (38)
2	110 (50)
2-1/2	138 (63)
3	170 (77)
3-1/2	204 (93)
4	240 (109)

ANSI/CSA LC4 Natural Gas

5.12 Exposure to elevated temperatures

5.12.1 General

A tube/pipe system utilizing press connect fittings shall withstand a temperature of 1000 °F (538 °C) for 1 h, without leaking in excess of 6.0 ft^3 (0.17 m^3) of air or nitrogen per hour. Manual valve seats, stem seals, lubricants, and gaskets are exempt from this requirement.

5.12.2 Method of test

A test assembly consisting of lengths of tube/pipe and one of each representative type of fitting shall be used. The outlet of the test assembly shall be sealed, and the inlet shall be connected to a system capable of supplying clean, dry air or nitrogen at a specified test pressure and to a flow device capable of accurately indicating the allowable leakage rate. A thermocouple shall be firmly attached to one fitting to monitor its temperature. The test assembly shall be placed in a preheated, 1000 °F (538 °C) test oven and arranged so that the inlet of the test assembly extends through an opening in the oven wall and connects to the air supply system. When the temperature of the fitting reaches 990 °F (532 °C), the oven shall be adjusted as necessary so that the fitting temperature is maintained at 990 to 1010 °F (532 543.3 °C) for 1 h. Once the test assembly has reached the specified temperature, air or nitrogen shall be admitted to the system and maintained at the specified rated operating pressure throughout the test, unless a leak is indicated by a drop in pressure. Leakage in excess of 6.0 ft^3/h (0.17 m^3/h) shall constitute non-compliance.

ANSI/CSA LC4 Natural Gas

5.5 Torsion

5.5.1 General

Test assemblies shall withstand, without leakage in excess of that specified in Clause 5.2.1 and without damage, a torque applied as specified in Table 1.

5.5.2 Method of test

A test assembly consisting of lengths of tube/pipe and one of each type of fitting shall be assembled in accordance with the manufacturer's installation instructions.

One end of the test assembly shall be securely attached to a fixed pipe to which a pneumatic system capable of supplying clean, dry air or nitrogen and a flow measuring device capable of accurately indicating the allowable leakage rate is connected. The other end shall be securely attached in a similar manner to a closed pipe connected to a mechanical means capable of applying a constant turning force as specified in Table 1. The required turning force shall be applied to the assembly and maintained for the duration of the test. At the end of 5 min, the assembly shall not leak in excess of 20 cm^3/h when tested in accordance with Clause 5.2.2.1.

Table 1
Torque
(See Clauses 5.5.1 and 5.5.2.)

Nominal size, in	Torque, lb-ft (N·m)
1/2	15 (20)
3/4	18 (25)
1	29 (40)
1-1/4	41 (55)
1-1/2	52 (70)
2	74 (100)
2-1/2	96 (130)
3	122 (165)
3-1/2	147 (200)
4	177 (240)

Warranty

- Warranty can be from the date of initial purchase or installation.
- Typical warranty is 15 years for fittings.
- Typical warranty is 5 years for valves.
- Warranty is not life expectancy.
- Traditional joining methods provide no warranty.

Eversource Implementation

Standards, Policies & Procedures

- In 2016 an Eversource pilot program was established and allowed for limited use of MPG fittings on low pressure gas service applications. The pilot program provided a means of evaluating MPG fitting quality, for use in gas service, relative to ease of installation, sealing quality and the ability to remain leak tight over time
- In 2017 Eversource began installing these fittings tied to the pilot program and monitoring the locations.
- In 2020 Eversource incorporates the use of MPG fittings on their jurisdictional piping.
- Work practices, Construction Standards, and O&M's, were updated to reflect the use of MPG fittings on jurisdictional piping.
- Best practice documents were published making Mega-Press the preferred method of pipe connection.
- Eversource has since developed an OQ for the use of MPG fittings.

Eversource Implementation

Operations Roll – Out

- 6 Area work centers in the legacy Nstar territory.
- Approximately 120 technicians were outfitted with Milwaukee tooling.
- With the acquisition of CMA, the technician count was increased to 230 & AWC's to 12.
- Field audits to ensure technicians are utilizing the product to its fullest potential.
- Supervisor expectation document was created to assist supervisors on when to use the product.
- Supervisor & Technicians trainings with the manufacturer to ensure they are familiar with the product.

EVERSOURCE

Safety First and Always

Mega Press Supervisor Expectations

Supervisors will assess fitting jobs to ensure MegaPress is used to its full potential. Supervisors shall review inventory to ensure we are not stocking items to hinder the use of MegaPress. If MegaPress is not used by technician's supervisors will follow up with technicians as to why MegaPress was not used. Jobsite checklists should be completed and noted as to weather or not we will be utilizing Mega-Press. Below are guidelines as to how jobs should be completed in the field. These are guides, and should be used along with best practices, and Eversource policies and procedures.

New Installs

- New installs on customer piping we should be using MegaPress
- Out of the manifold we can use threaded nipples or fittings to MegaPress couplings or adapters to limit water pooling.
- If a regulator is to be installed, utilize a male adapter on both sides of the regulator and press the connections in
- Meter bars for large meter banks can be pressed together with couplings to avoid the need to hoist welded rails into place before assembling

Fit Replacements/Repair

- Mega Press should always be considered first for any fit repair
- Cut out meter fit whenever possible instead of backing out threads.
- Utilize MegaPress from the shut off valve up.
- Inside and outside repairs can use slip couplings in place of backing out threads.

Eversource Implementation

- What we found as a company was that we would only be successful with making this transition to press fittings if we were all committed and believed in the process.
- Techs were given the tools they needed to fully adapt to the new technology and the training to ensure the quality and integrity of our systems were maintained.
- Supervisors were one of our main focus. They are the folks on the front lines with our employees doing the work and it was important that they pushed the product. Empowering them to ask techs why they did not press instead of allowing it to happen. Also explaining why the product is being used for their safety and the safety of our customers.

Eversource Implementation

Tooling

- Eversource originally outfitted all techs with the M18 Milwaukee platform for all tooling.
- Bandsaws were purchased in favor of 4-wheel cutters to help reduce soft tissue injuries while cutting pipe.
- As the product began being widely accepted by employees, we began purchasing the M12 platform for vehicles.
- The M12 tools were much lighter than the M18 platform and allowed for them to be used in tighter areas.
- M12 press tool is ½ the weight of the M18 press tool

Eversource Implementation

Safety Benefits

- Reduction in soft tissue injuries
- Wrenching was considered a backup for leak repair
- Expectations were set that the company would rather a tech cut out the section of leaking pipe with a saw, and press in a repair coupling.
- Pipeline safety was also improved with the transition to MPG. We saw a reduction in leaks after fitting work was completed due to the performance of the fittings.

Eversource Implementation

Increasing Efficiencies

- This was a photo take at one of our gas main replacement projects.
- It required the techs to rebuild a 16-meter manifold and tie into the new Intermediate Pressure gas riser.
- This job was completed by 2 technicians in 10 hours.
- As seen in the photo this also utilized the "hybrid" approach with both traditional and MPG fittings.

Eversource Implementation

- Hybrid fitting approach allows for conventional and MPG fittings to be used to execute a job safer and more efficiently.

- In this example, we were able to utilize a pre-fabricated rotary meter fit and press the final connections onto the customers 2 ½" fuel line

- This eliminated the need to purge the lines with nitrogen to allow our welder to weld a flange.

Eversource Implementation

Continuous Promotion & Improvement

- In 2023 we decided to put another focus on the use of MPG fittings in the organization.
- We decided to conduct "road-shows" in a handful of yards that we suspected were not using the fittings to their fullest potential.
- We would spend the day with the techs, starting with a presentation on the product, answering any questions they may have, then following them out into the field where we would see if they were using the fittings.
- In 2024 Eversource made a Mega-Press video that was published on their internal video learning site. It was filmed using a technician from a local yard in our Shrewsbury training facility.

What We Found

- Overall, the initiative was a success. We found that while in a group setting techs were hesitant to promote the fittings, but when we accompanied them in the field, they all praised the ease of use and versatility of the fittings.
- We did find areas of improvement while conducting these also.
  - Fitting placement in yards. One of the yards had the MPG fittings behind all the black malleable fittings. This made it easy for techs to grab the first fitting they see and leave.
  - The change was made to the stock area and the use of MPG fittings increased substantially.

Eversource Implementation

What's Next

- New tooling
  - Steel pipe cutter. The blade slides on a track and is concealed lessening the chance of a cut.
  - Power reamers to deburr and reem the pipe.
- New fittings configurations
  - Reducing MPG elbows
  - Insulated unions